ALL CONCEPTS CONTAINED WITHIN THIS DRAWING ARE PROPRIETARY TO PHOENIX ELECTROFORMED PRODUCTS, INC.
AND MAY NOT BE CONVEYED TO THIRD PARTIES WITHOUT WRITTEN CONSENT

REVISIONS				
ZONE	REV	DESCRIPTION	DATE	APPROVED

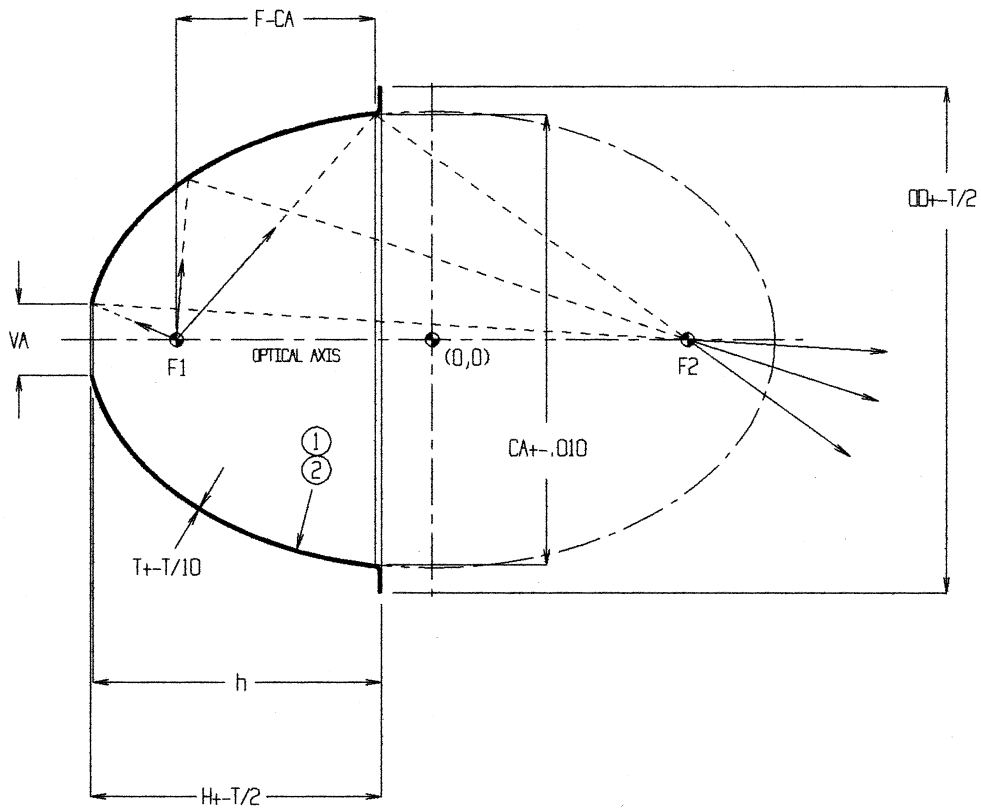

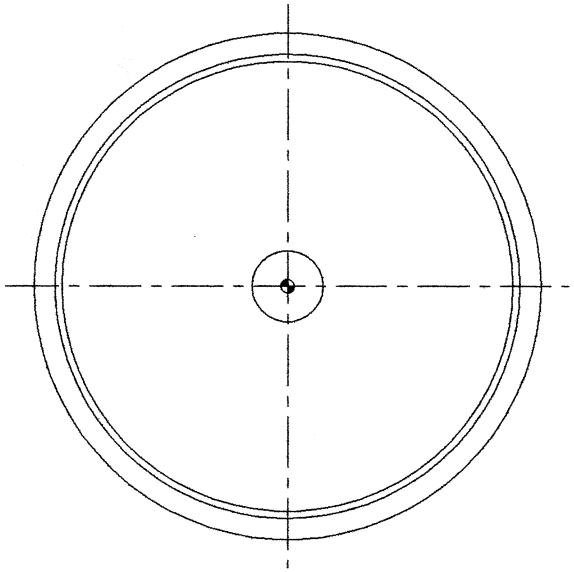

1. SURFACE FINISH 80-50 SCRATCH-DIG PER MIL-O-13830A
2. AVAILABLE REFLECTIVE ENHANCEMENT COATINGS:

AU1 VACUUM DEPOSITED GOLD
AU2 ELECTRO-DEPOSITED GOLD
AG VACUUM DEPOSITED SILVER
AF VACUUM DEPOSITED ALUMINUM / MAGNESIUM FLUORIDE (MgF_2) OVERCOAT
AQ VACUUM DEPOSITED ALUMINUM / QUARTZ (SiO_2) OVERCOAT
DCC DICHROIC COLD COATING
RH ELECTRO-DEPOSITED BRIGHT RHODIUM

#	VA	CA	OD	H	h	T	F-CA
.2	1.000	3.944	4.438	2.487	2.460	.025	1.736
.1	.625	3.944	4.438	2.544	2.518	.025	1.736

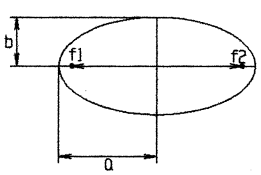

ELLIPSE EQUATION

$$\frac{X^2}{a^2}+\frac{Y^2}{b^2}=1$$

a=3.0000
b=2.0000
f=.7639
F1-F2=4.4721

UNLESS OTHERWISE SPECIFIED DIMENSIONS ARE IN INCHES
TOLERANCES ARE:
FRACTIONS +/- 1/16 DECIMALS .XX +/- .02 .XXX +/- .005 ANGLES +/- 1/2 DEG

FINISH 63 UNLESS OTHERWISE SPECIFIED

DO NOT SCALE DRAWING

MATERIAL LSSN

CONTRACT NO

APPROVALS	DATE
DRAWN LB	3-31-10
CHECKED	
ENGR	
DESIGN ACTIVITY	

PHOENIX
ELECTROFORMED PRODUCTS, INC.

TITLE ELLIPTICAL REFLECTOR EL6

SIZE | CAGE CODE | DWG NO EL6 | REV

SCALE | SHEET